Encryption Techniques

Jean-Michel Dricot – ULB Cybersecurity Research Center

In This Lecture

Definitions

Cryptography

The area of study of the many schemes used for encryption

Cryptographic system/cipher

A scheme

Cryptanalysis

Techniques used for deciphering a message without any knowledge of the enciphering details

Cryptology

The areas of cryptography and cryptanalysis

Simplified Model of Symmetric Encryption

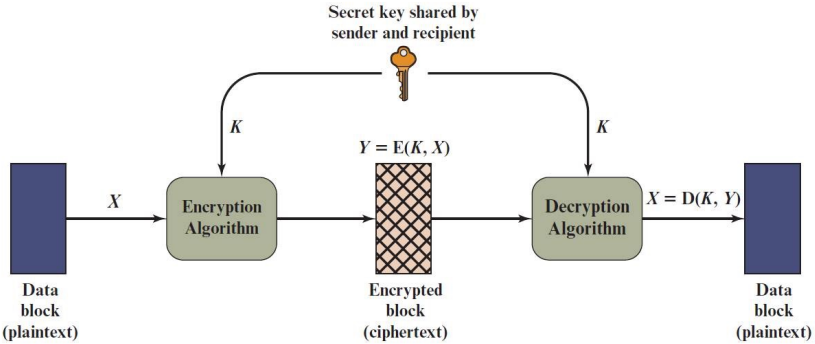

Sender and receiver must have obtained copies of the secret key in a secure fashion and must keep the key secure

Model of Symmetric Cryptosystem

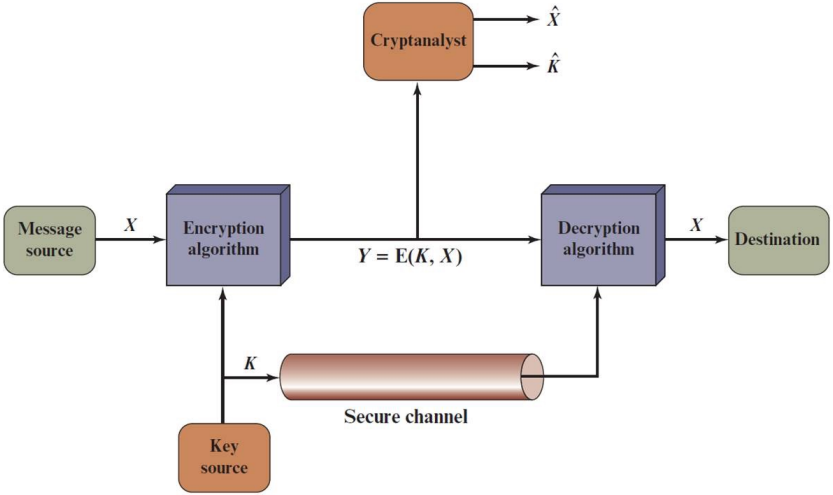

Cryptographic Systems

- The type of operations used for transforming plaintext to ciphertext
  - Substitution
  - Transposition
- The number of keys used
  - Symmetric, single-key, secret-key, conventional encryption
  - Asymmetric, two-key, or public-key encryption
- The way in which the plaintext is processed
  - Block cipher
  - Stream cipher

Vernam Cipher

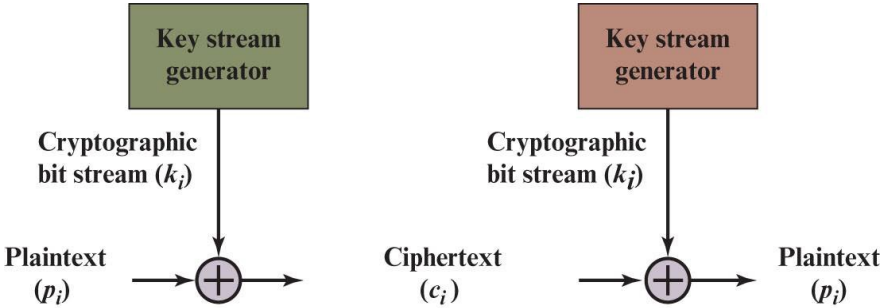

Stream Cipher

Definition

Encrypts a digital data stream one bit or one byte at a time

- In the ideal case, a one-time pad version of the Vernam cipher would be used, in which the keystream is as long as the plaintext bit stream
  - If the cryptographic keystream is random, then this cipher is unbreakable by any means other than acquiring the keystream
  - Keystream must be provided to both users in advance via some independent and secure channel
  - This introduces insurmountable logistical problems if the intended data traffic is very large

Stream Cipher

- For practical reasons the bit-stream generator must be implemented as an algorithmic procedure so that the cryptographic bit stream can be produced by both users
  - It must be computationally impractical to predict future portions of the bit stream based on previous portions of the bit stream
  - The two users need only share the generating key and each can produce the keystream

Linear Feedback Shift Register

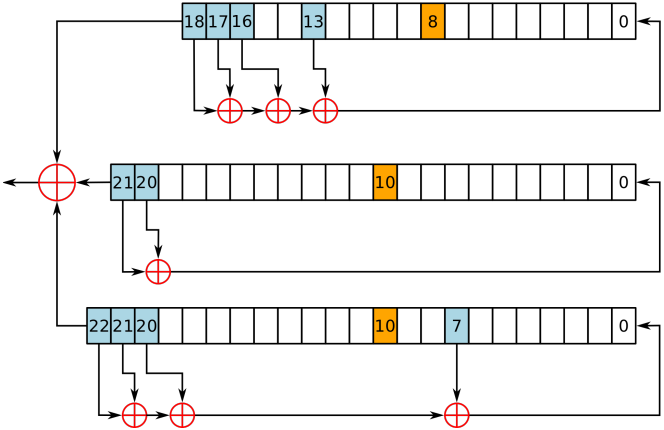

Block Cipher

Definition

A block of plaintext is treated as a whole and used to produce a ciphertext block of equal length

- Typically a block size of 64 or 128 bits is used
- As with a stream cipher, the two users share a symmetric encryption key
- The majority of network-based symmetric cryptographic applications make use of block ciphers

Stream / Block Cipher

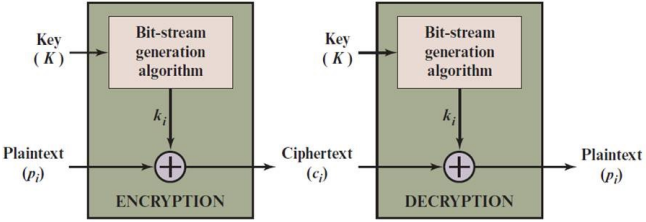

(a) Stream cipher using algorithmic bit-stream generator

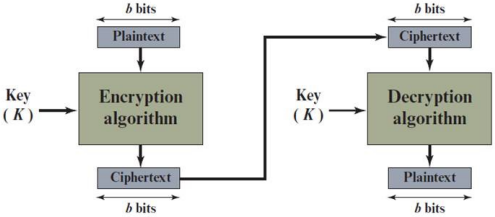

(b) Block cipher

Modes of Operation

Definition

A technique for enhancing the effect of a cryptographic algorithm or adapting the algorithm for an application

- To apply a block cipher in a variety of applications, five modes of operation have been defined by NIST
  - The five modes are intended to cover a wide variety of applications of encryption for which a block cipher could be used
  - These modes are intended for use with any symmetric block cipher, including AES

Modes of Operation

Mode	Description	Typical Application
Electronic Codebook (ECB)	Each block of plaintext bits is encoded independently using the same key.	• Secure transmission of single values (e.g., an encryption key)
Cipher Block Chaining (CBC)	The input to the encryption algorithm is the XOR of the next block of plaintext and the preceding block of ciphertext.	• General-purpose block-oriented transmission • Authentication
Cipher Feedback (CFB)	Input is processed s bits at a time. Preceding ciphertext is used as input to the encryption algorithm to produce pseudorandom output, which is XORed with plaintext to produce next unit of ciphertext.	• General-purpose stream-oriented transmission • Authentication
Output Feedback (OFB)	Similar to CFB, except that the input to the encryption algorithm is the preceding encryption output, and full blocks are used.	• Stream-oriented transmission over noisy channel (e.g., satellite communication)
Counter (CTR)	Each block of plaintext is XORed with an encrypted counter. The counter is incremented for each subsequent block.	• General-purpose block-oriented transmission • Useful for high-speed requirements

Electronic Codebook (ECB) Mode

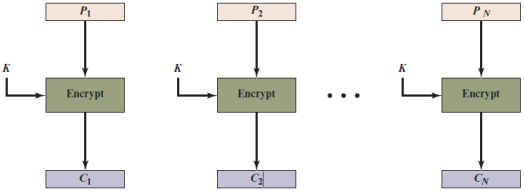

(a) Encryption

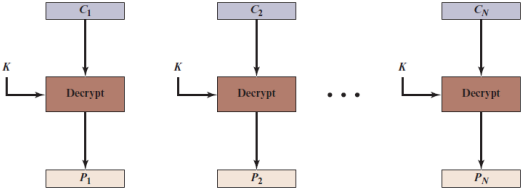

(b) Decryption

. . . But what can (should) we do better ?

- Reduce overhead
- Error recovery
- Error propagation
- Integrity protection
- Handle security as a stream of packets

. . . But what can (should) we do better ?

Original image

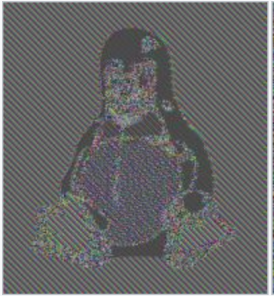

Encrypted using ECB mode

Chained modes

- For AES or any block cipher, encryption is performed on a block of b bits
  - In the case of AES-128 $b = 128$
- There are three modes that make it possible to convert a block cipher into a stream cipher:
  - Cipher feedback (CFB) mode
  - Output feedback (OFB) mode
  - Counter (CTR) mode

Cipher Block Chaining (CBC) Mode

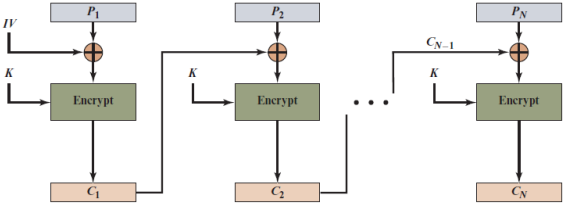

(a) Encryption

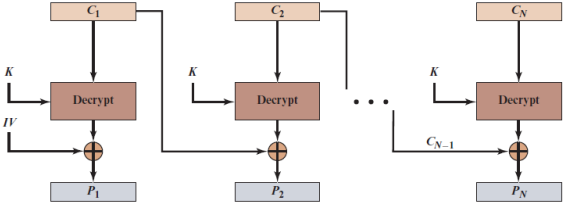

(b) Decryption

Output Feedback (OFB) Mode

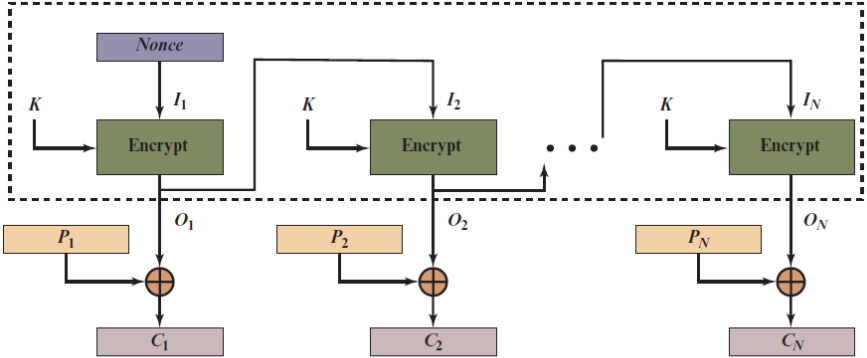

(a) Encryption

Output Feedback (OFB) Mode

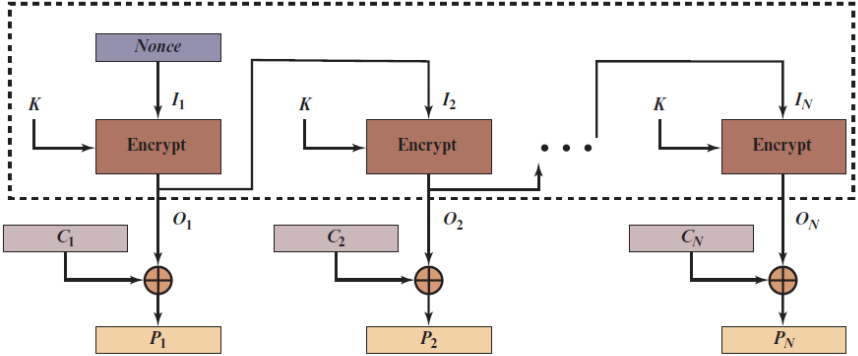

(b) Decryption

Counter Mode (CTR)

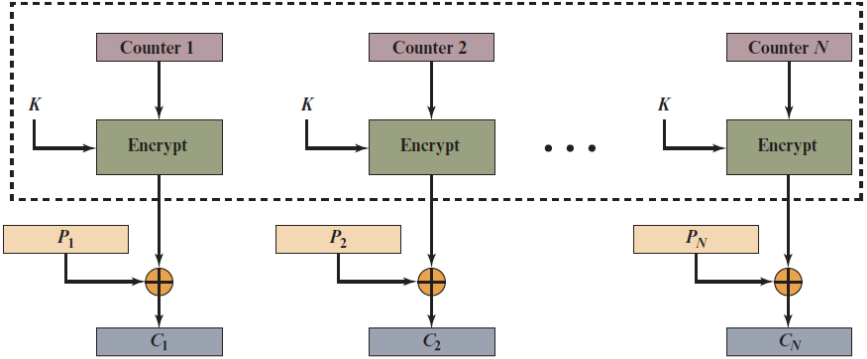

(a) Encryption

Counter Mode (CTR)

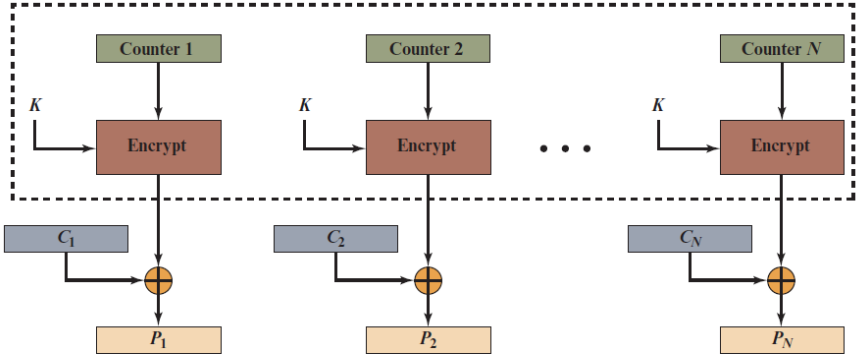

(b) Decryption

Advantages of CBC/OFB/CTR modes

- Hardware efficiency
  - Embedded systems and IoT
- Software efficiency
- Preprocessing / ability to recover from a loss
  - Predict the rolling keys' sequence
- Random access
- Provable security
- Very much compatible with the network protocol stack
  - TCP recovery
  - UDP/RTP losses
  - Wireless interferences

Advantages of CBC/OFB/CTR modes

Original image

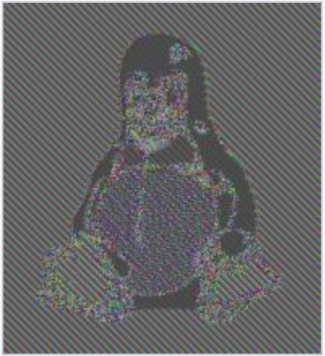

Encrypted using ECB mode

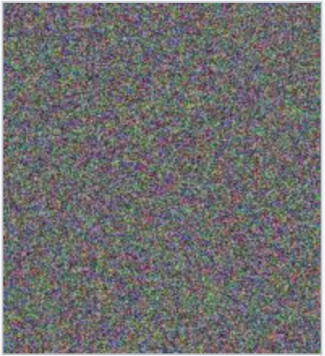

Modes other than ECB result in pseudo-randomness

Public-Key Cryptography

Asymmetric Keys

Two related keys, a public key and a private key, that are used to perform complementary operations, such as encryption and decryption or signature generation and signature verification.

Public Key (Asymmetric) Cryptographic Algorithm

A cryptographic algorithm that uses two related keys, a public key and a private key. The two keys have the property that deriving the private key from the public key is computationally infeasible.

Public-Key Cryptography

Public Key Certificate

A digital document issued and digitally signed by the private key of a Certification Authority that binds the name of a subscriber to a public key. The certificate indicates that the subscriber identified in the certificate has sole control and access to the corresponding private key.

Public Key Infrastructure

A set of policies, processes, server platforms, software and workstations used for the purpose of administering certificates and public-private key pairs, including the ability to issue, maintain, and revoke public key certificates.

Misconceptions Concerning Public-Key Encryption

- Public-key encryption is more secure from cryptanalysis than symmetric encryption
- Public-key encryption is a general-purpose technique that has made symmetric encryption obsolete
- There is a feeling that key distribution is trivial when using public-key encryption, compared to the cumbersome handshaking involved with key distribution centers for symmetric encryption

Principles of Public-Key Cryptosystems

- The concept of public-key cryptography evolved from an attempt to attack two of the most difficult problems associated with symmetric encryption:
- Key distribution
  - Have secure communications in general (without having to trust a KDC)
- Digital signatures
  - How to verify that a message comes intact from the claimed sender ?
- Whitfield Diffie and Martin Hellman from Stanford University achieved a breakthrough in 1976 by coming up with a method that addressed both problems and was radically different from all previous approaches to cryptography

Public-Key Cryptosystems

A public-key encryption scheme has six ingredients:

- Plaintext
  - The readable message or data that is fed into the algorithm as input
- Encryption algorithm
  - Performs various transformations on the plaintext
- Public key
  - Used for **encryption or decryption**
- Private key
  - Used for **encryption or decryption**
- Ciphertext
  - The scrambled message produced as output
- Decryption algorithm
  - Accepts the ciphertext and the matching key and produces the original plaintext

Public-Key Cryptography

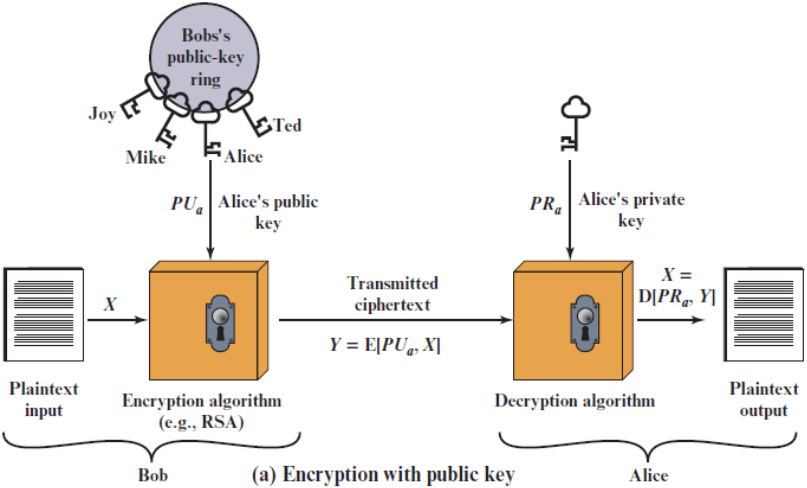

(a) Encryption with public key

Public-Key Cryptography

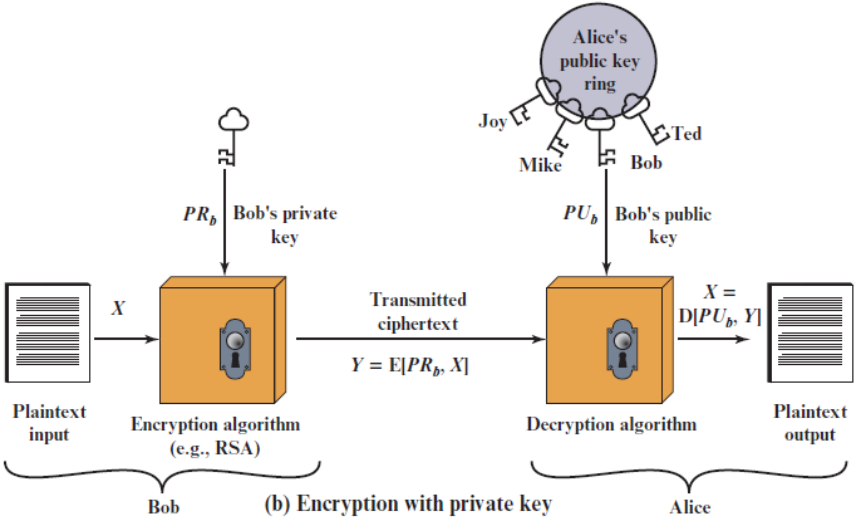

Figure 9.1 Public-Key Cryptography

Public-Key Cryptography

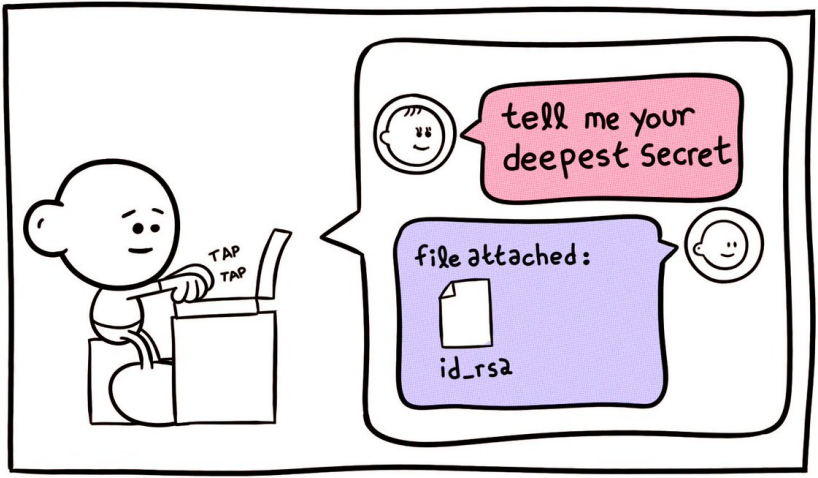

{turnoff.us}

Public-Key Cryptosystem: Confidentiality

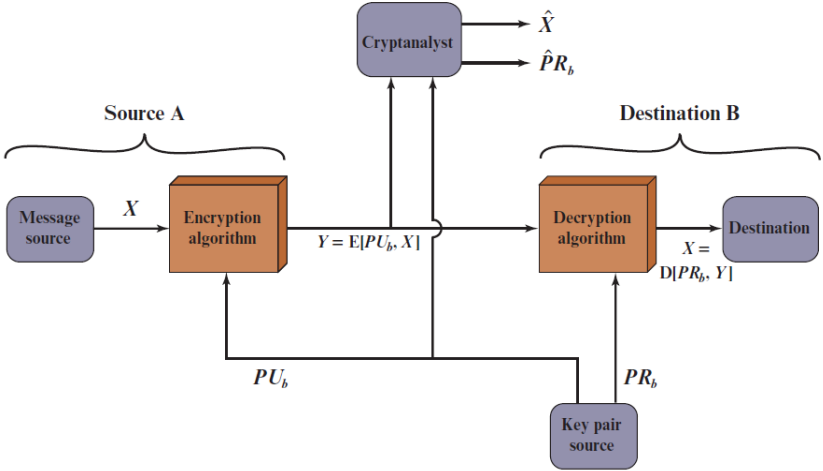

Public-Key Cryptosystem: Authentication

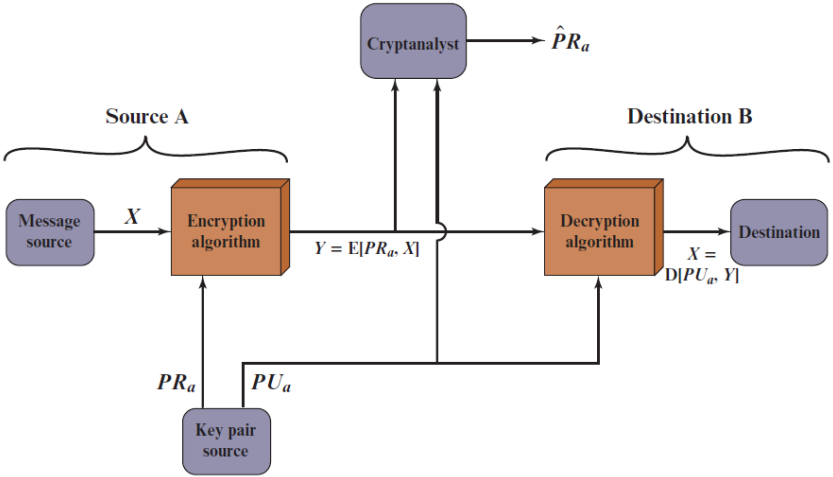

Public-Key Cryptosystem: Authentication and Secrecy

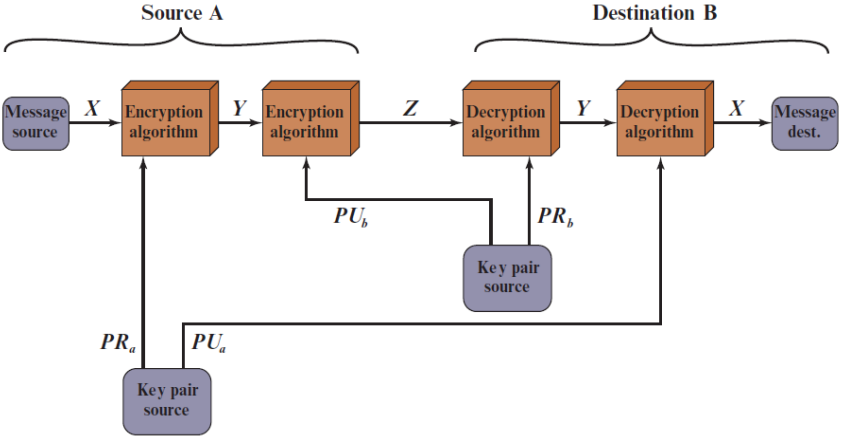

Applications for Public-Key Cryptosystems

- Public-key cryptosystems can be classified into three categories:
  - **Encryption/decryption** : the sender encrypts a message with the recipient's public key
  - **Digital signature** : the sender "signs" a message with its private key
  - **Key exchange**: two sides cooperate to exchange a session key
- Some algorithms are suitable for all three applications, whereas others can be used only for one or two

Diffie-Hellman Key Exchange

- First published public-key algorithm
- A number of commercial products employ this key exchange technique
- Purpose is to enable two users to securely exchange a key that can then be used for subsequent symmetric encryption of messages
- The algorithm itself is limited to the exchange of secret values
- Its effectiveness depends on the difficulty of computing discrete logarithms

Diffie-Hellman Key Exchange

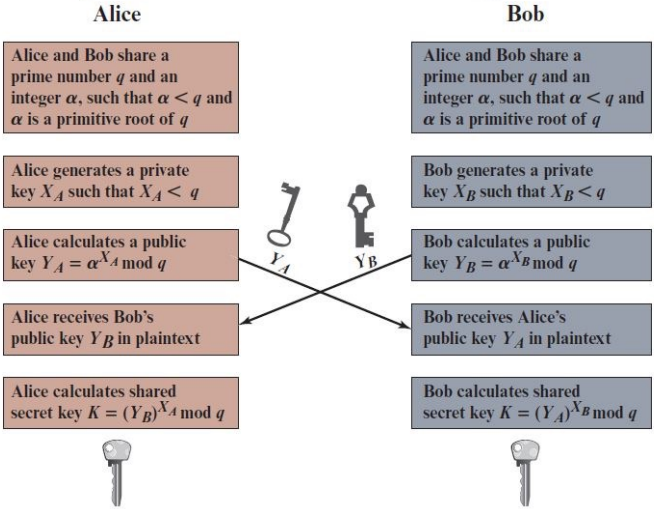

Diffie-Hellman Key Exchange : MitM

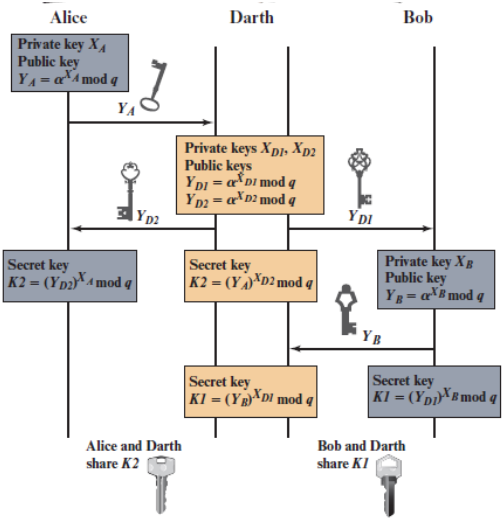

Pratical issues

- **Deployment** of public keys
  - who owns the public repository ?
  - scalability (key fetching rate)
  - trust (in keys and repository)
- Keys **lifecycle**
  - how to reinstall **all** copies of a public key
  - how to revoque
- Intermittent or no connectivity
  - IoT and embedded systems
  - sometimes a *false problem* (certificate pinning)